ITEM	T1	T2
BACKLIGHT	10.9	13.7
WITHOUT BL	6.2	9.0

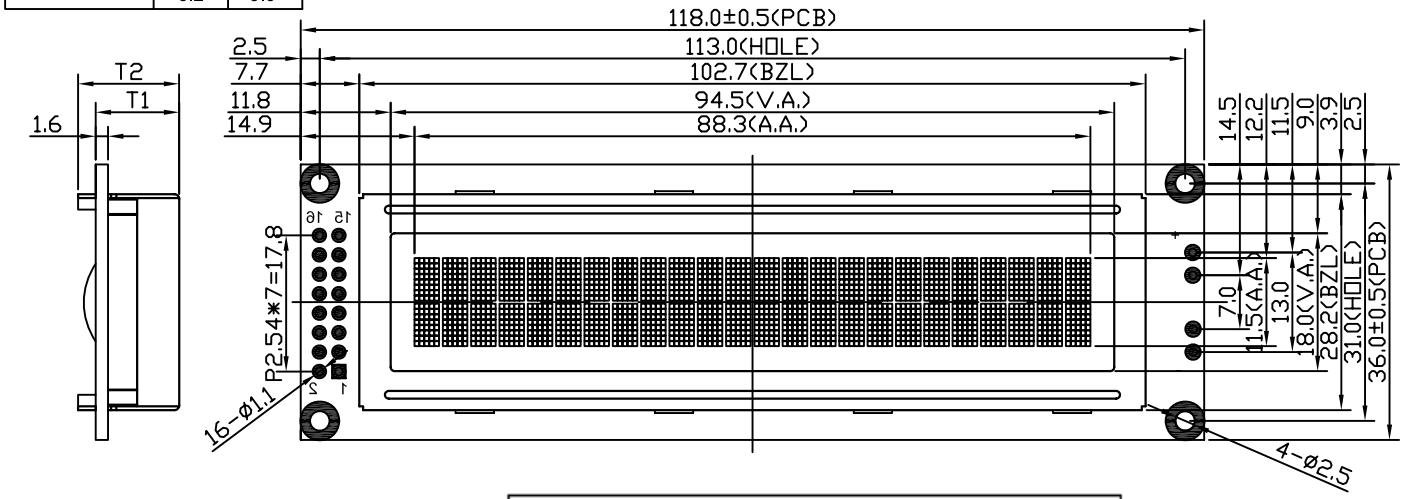

ITEM	SELECTABLE CONTENTS
DISPLAY MODE	STN YELLOW MODE
	STN GRAY MODE
	STN BLUE MODE
	FSTN
POLARIZER TYPE	REFLECTIVE
	TRANSFLECTIVE
	TRANSMISSIVE,POSITIVE
	TRANSMISSIVE,NEGATIVE
VIEWING DIRECTION	6 O'CLOCK
	12 O'CLOCK
LED BACKLIGHT	WHITE
	Y-G
	RED
	GREEN
	BLUE
	AMBER
	TRI-COLOR
TEMPERATURE RANGE	STANDARD TEMPERATURE
	WIDE TEMPERATURE
CHARACTER PATTERNS	ENGLISH-JAPANESE FONTS
	ENGLISH-EUROPEAN FONTS
	ENGLISH-RUSSIAN FONTS
	CYRILLIC FONTS
	HEBREW FONTS
OPERATING VOLTAGE	5V
LCD DRIVING VOLTAGE	4.5V
LCD DRIVE METHOD	1/16 DUTY 1/5 BIAS
LCD DRIVE IC	SPLC780D-001 OR EQUIV

PIN	SYMBOL
16	BL-
15	BL+
14	DB7
13	DB6
12	DB5
11	DB4
10	DB3
9	DB2
8	DB1
7	DB0
6	E
5	R/$\overline{W}$
4	RS
3	V0
2	VDD(5V)
1	VSS

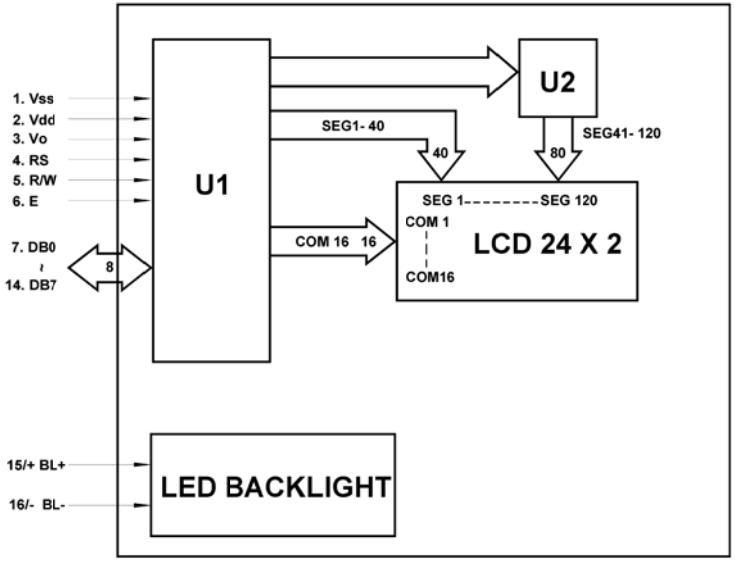

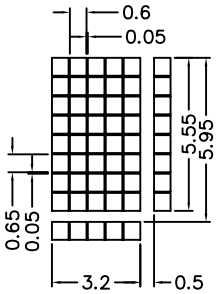

DISPLAY PATTERN

NOTE:

1.The backlight can be driven by pin1,pin2 or pin15,pin16 which is selectable.

2.The voltage of backlight is depended on the backlight color and the value of current-limiting resistance.

3.The operating voltage can be driven by 3.3v which is selectable.

THE PART NUMBER IN MASS PRODUCTION

1.GRAY OR Y-G STN,TRANSFLECTIVE LCD;Y-G BACKLIGHT;6 O'CLOCK;

2.BLUE STN,TRANSMISSIVE NEGATIVE LCD;Y-G BACKLIGHT;12 O'CLOCK;

3.GRAY OR Y-G STN,REFLECTIVE LCD;WITHOUT BACKLIGHT;6 O'CLOCK OR 12 O'CLOCK;

UNIT MM

3RD ANGLE

TOLERANCE
X.X = ±0.2
X.XX = ±0.10
ANG = –

SCALE: 1:1

DRAWN:

CHECKED:

APPROVED:

DISPLAYTRONIC

XIAMEN ZETTLER ELECTRONICS CO., LTD.

TITLE: LCM

MODEL NO: ACM2402C SERIES

REV A

PART NO:

SH NO 1/1